LINE TABLE		
LINE	BEARING	LENGTH
L1	N89°42'33"E	7.08'
L2	N01°44'50"E	254.41'
L3	N04°49'38"E	1014.68'
L4	N89°19'05"E	1200.18'
L5	N00°52'23"W	49.04'
L6	N00°28'54"W	1287.85'
L7	N08°46'03"E	198.62'
L8	N10°15'52"W	207.01'
L9	N00°47'08"W	951.41'
L10	S89°22'08"E	96.92'
L11	S62°02'05"E	280.03'
L12	S84°20'10"E	281.20'
L13	N66°40'29"E	221.09'
L14	N83°05'37"E	258.72'
L15	N61°08'34"E	60.01'
L16	S89°22'08"E	171.18'
L17	N00°53'29"W	155.26'
L18	N22°31'58"E	188.30'
L19	N02°17'34"W	206.75'
L20	N25°26'32"W	159.32'
L21	N01°03'29"W	812.71'
L22	N00°30'39"W	242.41'
L23	N66°20'19"E	520.56'
L24	N46°41'28"E	343.15'
L25	N28°59'55"E	51.79'
L26	N12°57'32"E	394.89'
L27	S89°28'00"E	474.45'
L28	N00°32'08"W	1301.82'
L29	N00°30'10"W	685.30'
L30	N10°32'41"E	314.93'
L31	N17°14'43"W	209.48'
L32	N00°30'10"W	1411.39'
L33	N88°32'26"W	1074.69'
L34	S88°14'00"E	860.28'
L35	S51°56'46"E	166.11'
L36	S03°36'02"E	1257.21'
L37	S17°14'43"E	57.65'
L38	S00°30'10"E	509.69'
L39	S10°32'41"W	368.20'
L40	S44°08'30"W	77.74'
L41	S11°15'27"W	69.60'
L42	S08°00'11"W	246.16'
L43	S12°45'40"W	266.20'
L44	S12°55'57"W	310.54'
L45	S12°55'49"W	650.13'
L46	S12°57'32"W	58.37'
L47	N89°28'00"W	848.06'
L48	S00°30'39"E	882.35'
L49	S66°20'19"W	2.51'
L50	S01°03'29"E	241.43'
L51	S00°30'39"E	186.23'
L52	S00°53'29"E	1150.86'
L53	S22°31'58"W	84.72'
L54	S61°08'34"W	155.61'
L55	N89°22'08"W	1039.65'
L56	N62°02'05"W	78.95'
L57	S86°36'07"W	27.70'
L58	S00°47'08"E	34.32'
L59	N89°22'08"W	9.94'

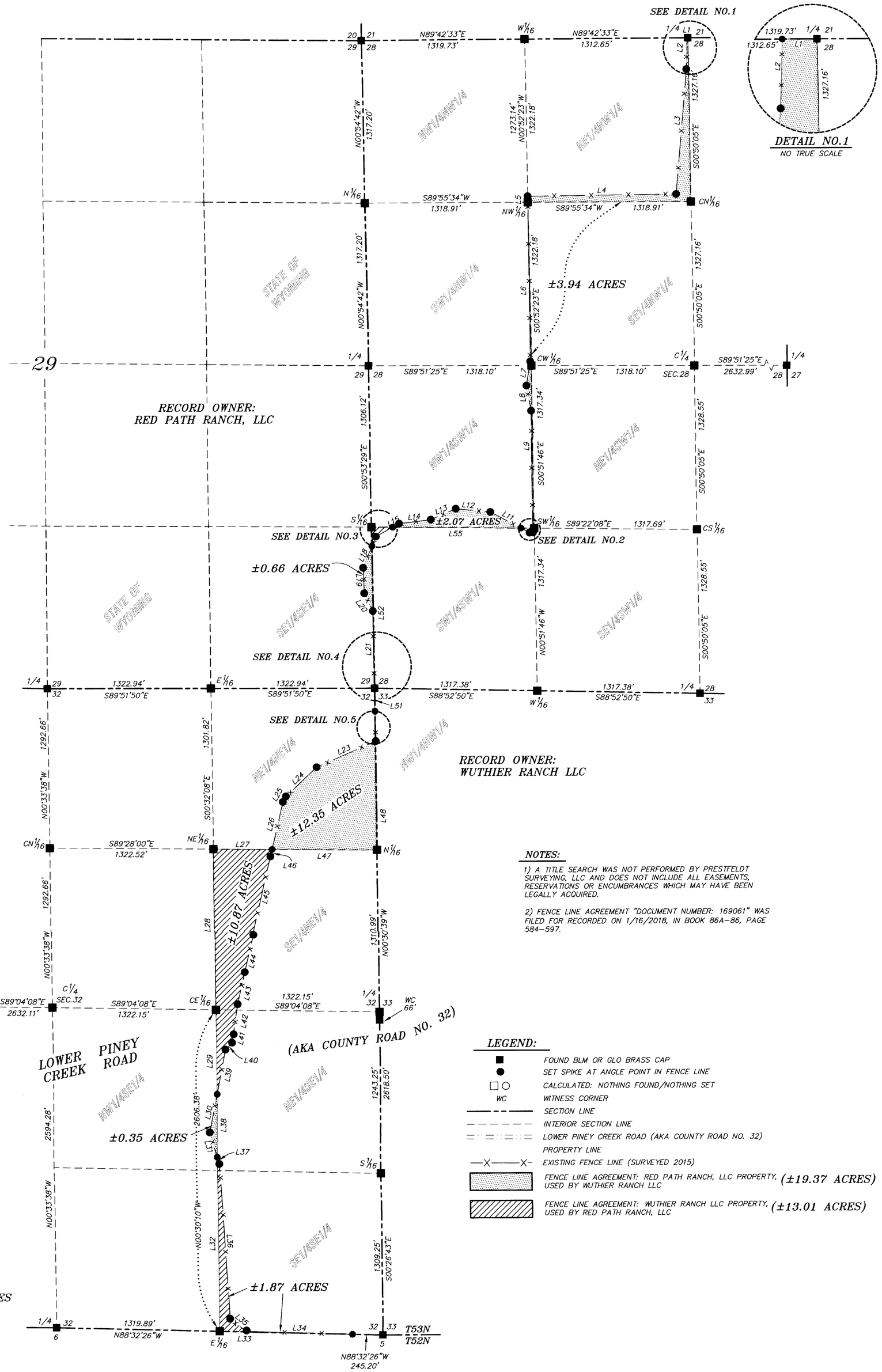

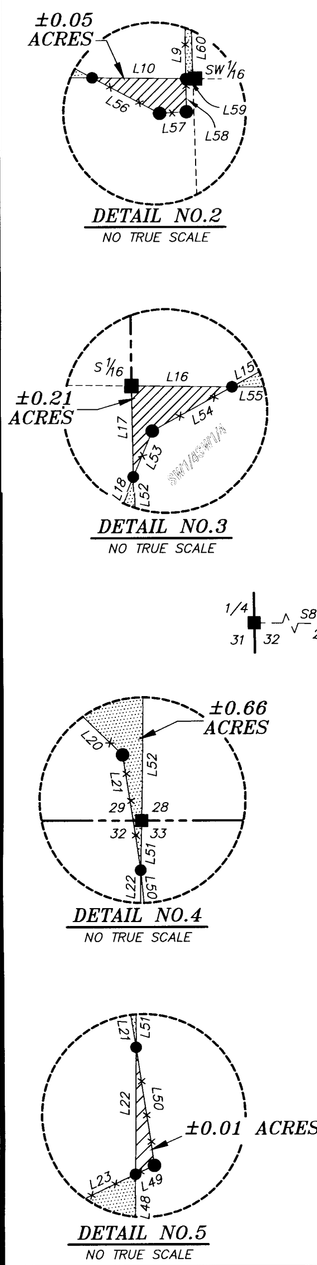

NOTES:

1) A TITLE SEARCH WAS NOT PERFORMED BY PRESTFELDT SURVEYING, LLC AND DOES NOT INCLUDE ALL EASEMENTS, RESERVATIONS OR ENCUMBRANCES WHICH MAY HAVE BEEN LEGALLY ACQUIRED.

2) FENCE LINE AGREEMENT "DOCUMENT NUMBER: 169061" WAS FILED FOR RECORDED ON 1/16/2018, IN BOOK 86A-86, PAGE 584-597.

LEGEND:

- FOUND BLM OR GLO BRASS CAP
- SET SPIKE AT ANGLE POINT IN FENCE LINE
- CALCULATED: NOTHING FOUND/NOTHING SET
- WC — WITNESS CORNER
- SECTION LINE
- INTERIOR SECTION LINE
- LOWER PINEY CREEK ROAD (AKA COUNTY ROAD NO. 32)
- PROPERTY LINE
- EXISTING FENCE LINE (SURVEYED 2015)
- FENCE LINE AGREEMENT: RED PATH RANCH, LLC PROPERTY, USED BY WUTHIER RANCH LLC (±19.37 ACRES)
- FENCE LINE AGREEMENT: WUTHIER RANCH LLC PROPERTY, USED BY RED PATH RANCH, LLC (±13.01 ACRES)

LEGAL DESCRIPTIONS

FENCE LINE AGREEMENT: RED PATH RANCH, LLC PROPERTY, USED BY WUTHIER RANCH LLC

A TRACT OF LAND SITUATED IN THE NW¼SW¼, SW¼NW¼ AND THE N½NW¼ OF SECTION 28, TOWNSHIP 53 NORTH, RANGE 82 WEST, 6TH P.M., JOHNSON COUNTY, WYOMING; SAID TRACT OF LAND BEING MORE PARTICULARLY DESCRIBED AS FOLLOWS:

BEGINNING AT THE NORTH QUARTER CORNER OF SAID SECTION 28 (MONUMENTED WITH BLM BRASS CAP); THENCE S00°50'05"E, 1327.16 FEET ALONG THE EAST LINE OF THE NE¼NW¼ OF SAID SECTION 28 TO A POINT, SAID POINT BEING THE SOUTHEAST CORNER OF SAID NE¼NW¼; THENCE S89°55'34"W, 1318.91 FEET ALONG THE SOUTH LINE OF SAID NE¼NW¼ TO A POINT, SAID POINT BEING SOUTHWEST CORNER OF SAID NE¼NW¼; THENCE S00°52'23"E, 1322.18 FEET ALONG THE EAST LINE OF SAID SW¼NW¼ TO A POINT, SAID POINT BEING THE SOUTHEAST CORNER OF SAID SW¼NW¼; THENCE S00°51'46"E, 1317.34 FEET ALONG THE EAST LINE OF SAID NW¼SW¼ TO A POINT, SAID POINT BEING THE SOUTHEAST CORNER OF SAID NW¼SW¼; THENCE N89°22'08"W, 9.94 FEET ALONG THE SOUTH LINE OF SAID NW¼SW¼ TO A POINT, SAID POINT LYING ON A FENCE LINE; THENCE N00°47'08"W, 951.41 FEET ALONG SAID FENCE LINE TO A POINT; THENCE N10°15'52"W, 207.01 FEET ALONG SAID FENCE LINE TO A POINT; THENCE N08°46'03"E, 198.62 FEET ALONG SAID FENCE LINE TO A POINT; THENCE N00°28'54"W, 1287.85 FEET ALONG SAID FENCE LINE TO A POINT; THENCE N00°52'23"W, 49.04 FEET ALONG SAID FENCE LINE TO A POINT, SAID POINT LYING ON THE WEST LINE OF SAID NE¼NW¼; THENCE N89°19'05"E, 1200.18 FEET ALONG SAID FENCE LINE TO A POINT; THENCE N04°49'38"E, 1014.68 FEET ALONG SAID FENCE LINE TO A POINT; THENCE N01°44'50"E, 254.41 FEET ALONG SAID FENCE LINE TO A POINT, SAID POINT LYING ON THE NORTH LINE OF SAID NE¼NW¼; THENCE N89°42'33"E, 7.08 FEET ALONG SAID NORTH LINE OF THE NE¼NW¼ TO THE POINT OF BEGINNING OF SAID TRACT.

SAID TRACT CONTAINS 3.94 ACRES OF LAND, MORE OR LESS.

ALSO,

A TRACT OF LAND SITUATED IN THE NW¼SW¼ OF SECTION 28, TOWNSHIP 53 NORTH, RANGE 82 WEST, 6TH P.M., JOHNSON COUNTY, WYOMING; SAID TRACT OF LAND BEING MORE PARTICULARLY DESCRIBED AS FOLLOWS:

COMMENCING AT THE SOUTHWEST CORNER OF SAID SECTION 28 (MONUMENTED WITH BLM BRASS CAP); THENCE N00°53'29"W, 1306.12 FEET ALONG THE WEST LINE OF SAID SECTION 28 TO A POINT, SAID POINT BEING THE SOUTHWEST CORNER OF SAID NW¼SW¼; THENCE S89°22'08"E, 171.18 FEET ALONG THE SOUTH LINE OF SAID NW¼SW¼ TO THE POINT OF BEGINNING OF SAID TRACT, SAID POINT LYING ON A FENCE LINE; THENCE N61°08'34"E, 60.01 FEET ALONG SAID FENCE LINE TO A POINT; THENCE N83°05'37"E, 258.72 FEET ALONG SAID FENCE LINE TO A POINT; THENCE N66°40'29"E, 221.09 FEET ALONG SAID FENCE LINE TO A POINT; THENCE S84°20'10"E, 281.20 FEET ALONG SAID FENCE LINE TO A POINT; THENCE S62°02'05"E, 280.03 FEET ALONG SAID FENCE LINE TO A POINT, SAID POINT LYING ON SAID SOUTH LINE OF THE NW¼SW¼; THENCE N89°22'08"W, 1039.65 FEET ALONG SAID SOUTH LINE OF THE NW¼SW¼ TO THE POINT OF BEGINNING OF SAID TRACT.

SAID TRACT CONTAINS 2.07 ACRES OF LAND, MORE OR LESS.

ALSO,

A TRACT OF LAND SITUATED IN THE SE¼SE¼ OF SECTION 29 AND THE NE¼NE¼ OF SECTION 32, TOWNSHIP 53 NORTH, RANGE 82 WEST, 6TH P.M., JOHNSTON COUNTY, WYOMING; SAID TRACT OF LAND BEING MORE PARTICULARLY DESCRIBED AS FOLLOWS:

BEGINNING AT THE SOUTHEAST CORNER OF SAID SECTION 29 (MONUMENTED WITH A BLM BRASS CAP); THENCE S00°30'39"E, 186.23 FEET ALONG THE EAST LINE OF SAID NE¼NE¼ TO A POINT, SAID POINT LYING ON FENCE LINE; THENCE N01°03'29"W, 812.71 FEET ALONG SAID FENCE LINE TO A POINT; THENCE N25°26'32"W, 159.32 FEET ALONG SAID FENCE LINE TO A POINT; THENCE N02°17'34"W, 206.75 FEET ALONG SAID FENCE LINE TO A POINT; THENCE N22°31'58"E, 188.30 FEET ALONG SAID FENCE LINE TO A POINT, SAID POINT LYING ON THE EAST LINE OF THE SE¼SE¼; THENCE S00°53'29"E, 1150.86 FEET ALONG SAID EAST LINE OF SAID SE¼SE¼ TO THE POINT OF BEGINNING OF SAID TRACT.

SAID TRACT CONTAINS 0.66 ACRES OF LAND, MORE OR LESS.

ALSO,

A TRACT OF LAND SITUATED IN THE NE¼NE¼ OF SECTION 32, TOWNSHIP 53 NORTH, RANGE 82 WEST, 6TH P.M., JOHNSON COUNTY, WYOMING; SAID TRACT OF LAND BEING MORE PARTICULARLY DESCRIBED AS FOLLOWS:

COMMENCING AT THE NORTHEAST CORNER OF SAID SECTION 32 (MONUMENTED WITH BLM BRASS CAP); THENCE S00°30'39"E, 428.64 FEET ALONG THE EAST LINE OF SAID NE¼NE¼ TO THE POINT OF BEGINNING OF SAID TRACT; THENCE, CONTINUE S00°30'39"E, 882.35 FEET ALONG SAID EAST LINE OF THE NE¼NE¼ TO A POINT, SAID POINT BEING THE SOUTHEAST CORNER OF SAID NE¼NE¼; THENCE N89°28'00"W, 848.06 FEET ALONG THE SOUTH LINE OF SAID NE¼NE¼ TO A POINT, SAID POINT LYING ON A FENCE LINE; THENCE N12°57'32"E, 394.89 FEET ALONG SAID FENCE LINE TO A POINT; THENCE N28°59'55"E, 51.79 FEET ALONG SAID FENCE LINE TO A POINT; THENCE N46°41'28"E, 343.15 FEET ALONG SAID FENCE LINE TO A POINT; THENCE N66°20'19"E, 520.56 FEET ALONG SAID FENCE LINE TO THE POINT OF BEGINNING OF SAID TRACT.

SAID TRACT CONTAINS 12.35 ACRES OF LAND, MORE OR LESS.

ALSO,

A TRACT OF LAND SITUATED IN THE NW¼SE¼ OF SECTION 32, TOWNSHIP 53 NORTH, RANGE 82 WEST, 6TH P.M., JOHNSON COUNTY, WYOMING; SAID TRACT OF LAND BEING MORE PARTICULARLY DESCRIBED AS FOLLOWS:

COMMENCING AT THE SOUTHEAST CORNER OF SAID SECTION 32 (MONUMENTED WITH BLM BRASS CAP); THENCE N88°32'26"W, 1319.89 FEET ALONG THE SOUTH LINE OF SAID SECTION 32 TO A POINT, SAID POINT BEING THE SOUTHEAST CORNER OF SAID W½SE¼ OF SECTION 32; THENCE N00°30'10"W, 1411.39 FEET ALONG THE EAST LINE OF SAID W½SE¼ TO THE POINT OF BEGINNING OF SAID TRACT, SAID POINT LYING ON A FENCE LINE; THENCE N17°14'43"W, 209.48 FEET ALONG SAID FENCE LINE TO A POINT; THENCE N10°32'41"E, 314.93 FEET ALONG SAID FENCE LINE TO A POINT, SAID POINT LYING ON THE EAST LINE OF SAID NW¼SE¼; THENCE S00°30'10"E, 509.69 FEET ALONG SAID EAST LINE OF THE NW¼SE¼ TO THE POINT OF BEGINNING OF SAID TRACT.

SAID TRACT CONTAINS 0.35 ACRES OF LAND, MORE OR LESS.

FENCE LINE AGREEMENT: WUTHIER RANCH LLC PROPERTY, USED BY RED PATH RANCH, LLC

A TRACT OF LAND SITUATED IN THE E½SE¼ OF SECTION 32, TOWNSHIP 53 NORTH, RANGE 82 WEST, 6TH P.M., JOHNSON COUNTY, WYOMING; SAID TRACT OF LAND BEING MORE PARTICULARLY DESCRIBED AS FOLLOWS:

COMMENCING AT THE SOUTHEAST CORNER OF SAID SECTION 32 (MONUMENTED WITH BLM BRASS CAP); THENCE N88°32'26"W, 245.20 FEET ALONG THE SOUTH LINE OF THE SE¼SE¼ TO THE POINT OF BEGINNING OF SAID TRACT; THENCE, CONTINUE N88°32'26"W, 1074.69 FEET ALONG SAID SOUTH LINE OF THE SE¼SE¼ TO A POINT, SAID POINT BEING THE SOUTHWEST CORNER OF SAID SE¼SE¼; THENCE N00°30'10"W, 1411.39 FEET ALONG THE WEST LINE OF SAID E½SE¼ TO A POINT, SAID POINT LYING ON A FENCE LINE; THENCE S17°14'43"E, 57.65 FEET ALONG SAID FENCE LINE TO A POINT; THENCE S03°36'02"E, 1257.21 FEET ALONG SAID FENCE LINE TO A POINT; THENCE S51°56'46"E, 166.11 FEET ALONG SAID FENCE LINE TO A POINT; THENCE S88°14'00"E, 860.28 FEET ALONG SAID FENCE LINE TO THE POINT OF BEGINNING OF SAID TRACT.

SAID TRACT CONTAINS 1.87 ACRES OF LAND, MORE OR LESS

ALSO,

A TRACT OF LAND SITUATED IN THE SE¼NE¼ AND THE NE¼SE¼ OF SECTION 32, TOWNSHIP 53 NORTH, RANGE 82 WEST, 6TH P.M., JOHNSON COUNTY, WYOMING; SAID TRACT OF LAND BEING MORE PARTICULARLY DESCRIBED AS FOLLOWS:

COMMENCING AT THE SOUTHEAST CORNER OF SAID SECTION 32 (MONUMENTED WITH BLM BRASS CAP); THENCE N88°32'26"W, 1319.89 FEET ALONG THE SOUTH LINE OF THE SE¼SE¼, SECTION 32 TO A POINT, SAID POINT BEING THE SOUTHWEST CORNER OF SAID SE¼SE¼; THENCE N00°30'10"W, 1921.08 FEET ALONG THE WEST LINE OF THE E½SE¼, SECTION 32 TO THE POINT OF BEGINNING OF SAID TRACT, SAID POINT LYING ON A FENCE LINE; THENCE N00°30'10"W, 685.30 FEET ALONG THE WEST LINE OF SAID NE¼SE¼ TO A POINT, SAID POINT BEING THE SOUTHWEST CORNER OF SAID SE¼NE¼; THENCE N00°32'08"W, 1301.82 FEET ALONG THE WEST LINE OF SAID SE¼NE¼ TO A POINT, SAID POINT BEING THE NORTHWEST CORNER OF SAID SE¼NE¼; THENCE S89°28'00"E, 474.45 FEET ALONG THE NORTH LINE OF SAID SE¼NE¼ TO A POINT, SAID POINT LYING ON A FENCE LINE; THENCE S12°57'32"W, 58.37 FEET ALONG SAID FENCE LINE TO A POINT; THENCE S12°55'49"W, 650.13 FEET ALONG SAID FENCE LINE TO A POINT; THENCE S12°55'57"W, 310.54 FEET ALONG SAID FENCE LINE TO A POINT; THENCE S12°45'40"W, 266.20 FEET ALONG SAID FENCE LINE TO A POINT; THENCE S08°00'11"W, 246.16 FEET ALONG SAID FENCE LINE TO A POINT; THENCE S11°15'27"W, 69.60 FEET ALONG SAID FENCE LINE TO A POINT; THENCE S44°08'30"W, 77.74 FEET ALONG SAID FENCE LINE TO A POINT; THENCE S10°32'41"W, 368.20 FEET ALONG SAID FENCE LINE TO THE POINT OF BEGINNING OF SAID TRACT.

SAID TRACT CONTAINS 10.87 ACRES OF LAND, MORE OR LESS

ALSO,

A TRACT OF LAND SITUATED IN THE NW¼NW¼ OF SECTION 33, TOWNSHIP 53 NORTH, RANGE 82 WEST, 6TH P.M., JOHNSON COUNTY, WYOMING; SAID TRACT OF LAND BEING MORE PARTICULARLY DESCRIBED AS FOLLOWS:

COMMENCING AT THE NORTHWEST CORNER OF SAID SECTION 33 (MONUMENTED WITH BLM BRASS CAP); THENCE S00°30'39"E, 186.23 FEET ALONG THE WEST LINE OF SAID NW¼NW¼ TO THE POINT OF BEGINNING OF SAID TRACT, SAID POINT LYING ON A FENCE LINE; THENCE S01°03'29"E, 241.43 FEET ALONG SAID FENCE LINE TO A POINT; THENCE S66°20'19"W, 2.51 FEET ALONG SAID FENCE LINE TO A POINT, SAID POINT LYING ON SAID WEST LINE OF THE NW¼NW¼; THENCE N00°30'39"W, 242.41 FEET ALONG SAID WEST LINE OF THE NW¼NW¼ TO THE POINT OF BEGINNING OF SAID TRACT.

SAID TRACT CONTAINS 0.01 ACRES OF LAND, MORE OR LESS.

ALSO,

A TRACT OF LAND SITUATED IN THE SW¼SW¼ OF SECTION 28, TOWNSHIP 53 NORTH, RANGE 82 WEST, 6TH P.M., JOHNSON COUNTY, WYOMING; SAID TRACT OF LAND BEING MORE PARTICULARLY DESCRIBED AS FOLLOWS:

COMMENCING AT THE SOUTHWEST CORNER OF SAID SECTION 28 (MONUMENTED WITH BLM BRASS CAP); THENCE N00°53'29"W, 1150.86 FEET ALONG THE WEST LINE OF SAID SW¼SW¼ TO THE POINT OF BEGINNING OF SAID TRACT, SAID POINT LYING ON A FENCE LINE; THENCE N00°53'29"W, 155.26 FEET ALONG SAID WEST LINE OF THE SW¼SW¼ TO A POINT, SAID POINT BEING THE NORTHWEST CORNER OF SAID SW¼SW¼; THENCE S89°22'08"E, 171.18 FEET ALONG THE NORTH LINE OF SAID SW¼SW¼ TO A POINT, SAID POINT LYING ON A FENCE LINE; THENCE S61°08'34"W, 155.61 FEET ALONG SAID FENCE LINE TO A POINT; THENCE S22°31'58"W, 84.72 FEET ALONG SAID FENCE LINE TO THE POINT OF BEGINNING OF SAID TRACT.

SAID TRACT CONTAINS 0.21 ACRES OF LAND, MORE OR LESS.

ALSO,

A TRACT OF LAND SITUATED IN THE SW¼SW¼ OF SECTION 28, TOWNSHIP 53 NORTH, RANGE 82 WEST, 6TH P.M., JOHNSTON COUNTY, WYOMING; SAID TRACT OF LAND BEING MORE PARTICULARLY DESCRIBED AS FOLLOWS:

COMMENCING AT THE SOUTHWEST CORNER OF SAID SECTION 28 (MONUMENTED WITH BLM BRASS CAP); THENCE N00°53'29"W, 1306.12 FEET ALONG THE WEST LINE OF SW¼SW¼ TO A POINT, SAID POINT BEING THE NORTHWEST CORNER OF SAID SW¼SW¼; THENCE S89°22'08"E, 1210.83 FEET ALONG THE NORTH LINE OF SAID SW¼SW¼ TO THE POINT OF BEGINNING OF SAID TRACT; THENCE S89°22'08"E, 96.92 FEET ALONG SAID NORTH LINE OF THE SW¼SW¼ TO A POINT, SAID POINT LYING ON A FENCE LINE; THENCE S00°47'08"E, 34.32 FEET ALONG SAID FENCE LINE TO A POINT; THENCE S86°36'07"W, 27.70 FEET ALONG SAID FENCE LINE TO A POINT; THENCE N62°02'05"W, 78.95 FEET ALONG SAID FENCE LINE TO THE POINT OF BEGINNING OF SAID TRACT.

SAID TRACT CONTAINS 0.05 ACRES OF LAND, MORE OR LESS.

TOWNSHIP 53 NORTH
RANGE 82 WEST
JOHNSON COUNTY, WY

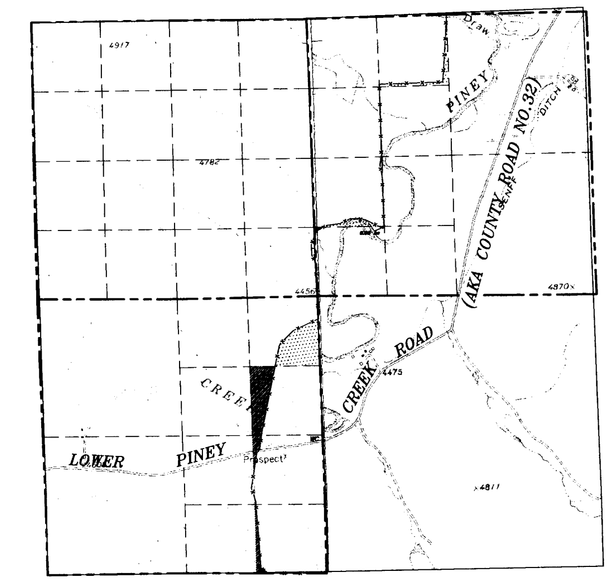

LOCATION MAP:
NO TRUE SCALE

SCALE: 1"=500'
BEARINGS ARE BASED ON THE
WYOMING COORDINATE SYSTEM NAD 1983, EAST CENTRAL ZONE
DISTANCES ARE SURFACE

GRAPHIC SCALE

-500 0 250 500 1000 2000

(U.S. SURVEY FEET)
1 inch = 500 ft.

DATUM:

NAD 83(1993), NAVD 88 (U.S. SURVEY FEET)
DATUM ADJUSTMENT FACTOR (DAF): 1.000265661
DIVIDE SURFACE COORDINATES BY DAF TO CALCULATE
THE WYOMING COORDINATE SYSTEM NAD 1983,
EAST CENTRAL ZONE, COORDINATES

STATE OF WYOMING }
COUNTY OF JOHNSON } SS

Doc Number: 169330
This instrument was Filed for record on 1/26/2018 at 12:30 PM
and was duly recorded in book: H-FILE page: 460 - 460 fees: 75.00
Johnson County Clerk
By Margie Cooks, Deputy

SURVEYOR'S CERTIFICATE

STATE OF WYOMING
COUNTY OF SHERIDAN :SS

I, THOMAS D. TUCKER, A DULY REGISTERED LAND SURVEYOR IN THE STATE OF WYOMING, DO HEREBY STATE THAT THIS PLAT REPRESENTS THE RESULTS OF A SURVEY MADE BY ME OR UNDER MY DIRECT SUPERVISION.

Professional Land Surveyor
THOMAS D. TUCKER
6812
Date: JAN. 25, 2018
WYOMING

"PLAT IS VALID ONLY IF PRINT HAS ORIGINAL SIGNATURE OF SURVEYOR SIGNED AND DATED"

CERTIFICATE OF RECORDER

STATE OF WYOMING) :SS
COUNTY OF JOHNSON)

THIS PLAT WAS FILED FOR RECORD IN THE OFFICE OF THE CLERK AND RECORDER AT _____O'CLOCK___.M.,

THIS_____, DAY OF _____, 20 _____, AND IS DULY RECORDED IN DRAWER _____, PLAT NO. _____

FEE $ _____

_____ STAMP RECEIVING NUMBER _____
COUNTY CLERK

RECORD OF SURVEY

FENCE LINE AGREEMENT

PRESTFELDT SURVEYING
2340 WETLANDS DR., SUITE 100
PO BOX 3082
SHERIDAN, WY 82801
307-672-7415

CLIENT: RED PATH RANCH, LLC
LOCATION: SECTION 28, SECTION 29 & SECTION 32, TOWNSHIP 53 NORTH, RANGE 82 WEST, 6TH P.M., JOHNSON COUNTY, WYOMING

JN: 2015-036
DN: 2015-0360
TAB: WUTHIER
FF: T2015-036
FEBRUARY 24, 2017
UPDATED NOTES:
JANUARY 23, 2018